Application Note

LLL15x7 Linear Silicone Collimators

LLL15N7 and **LLL15A7** are linear silicone collimators designed to match various application from wall washing to UV curing light sources. This application note will give some guidelines on LED choice, LED spacing and mechanical integration.

Product description

LLL15N7: Narrow beam symmetrical linear collimator

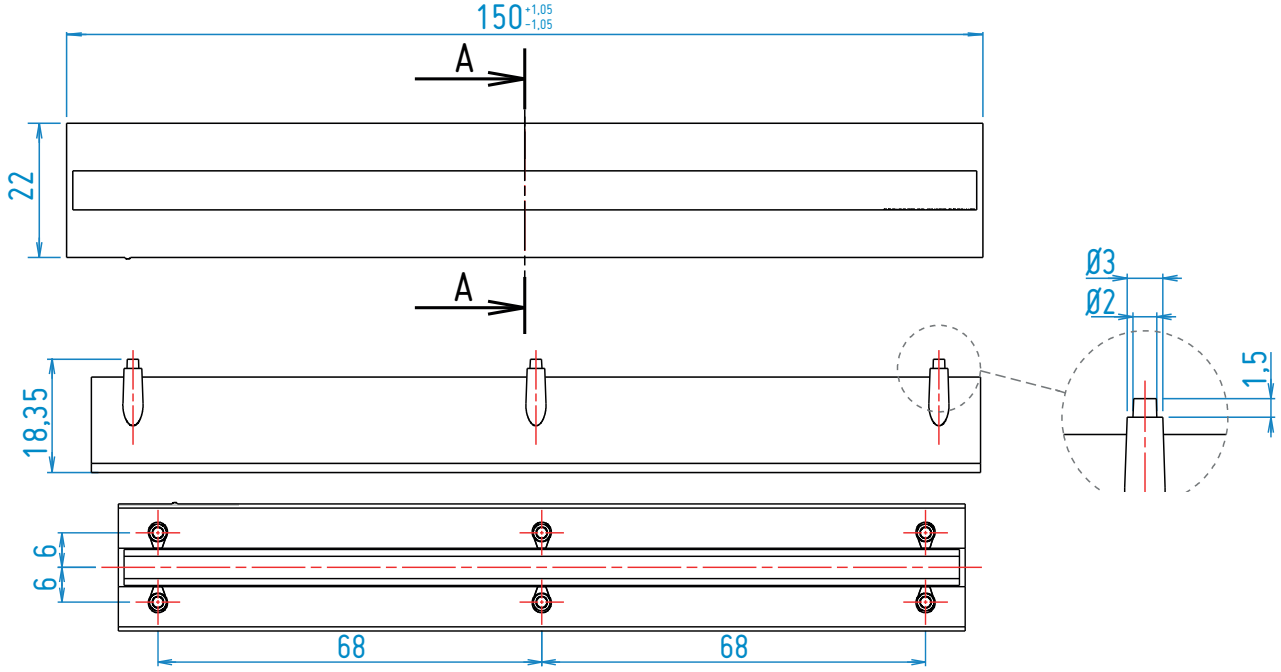

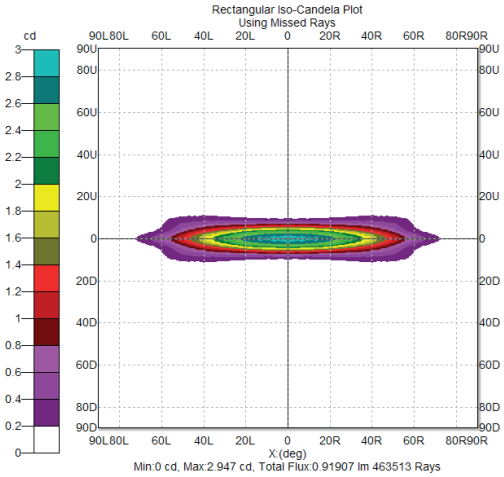

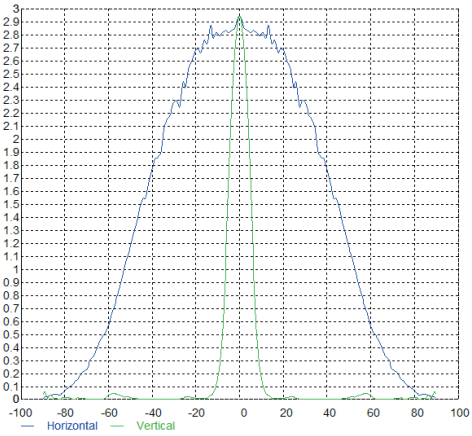

LLL15A7 : Asymmetrical beam linear collimator

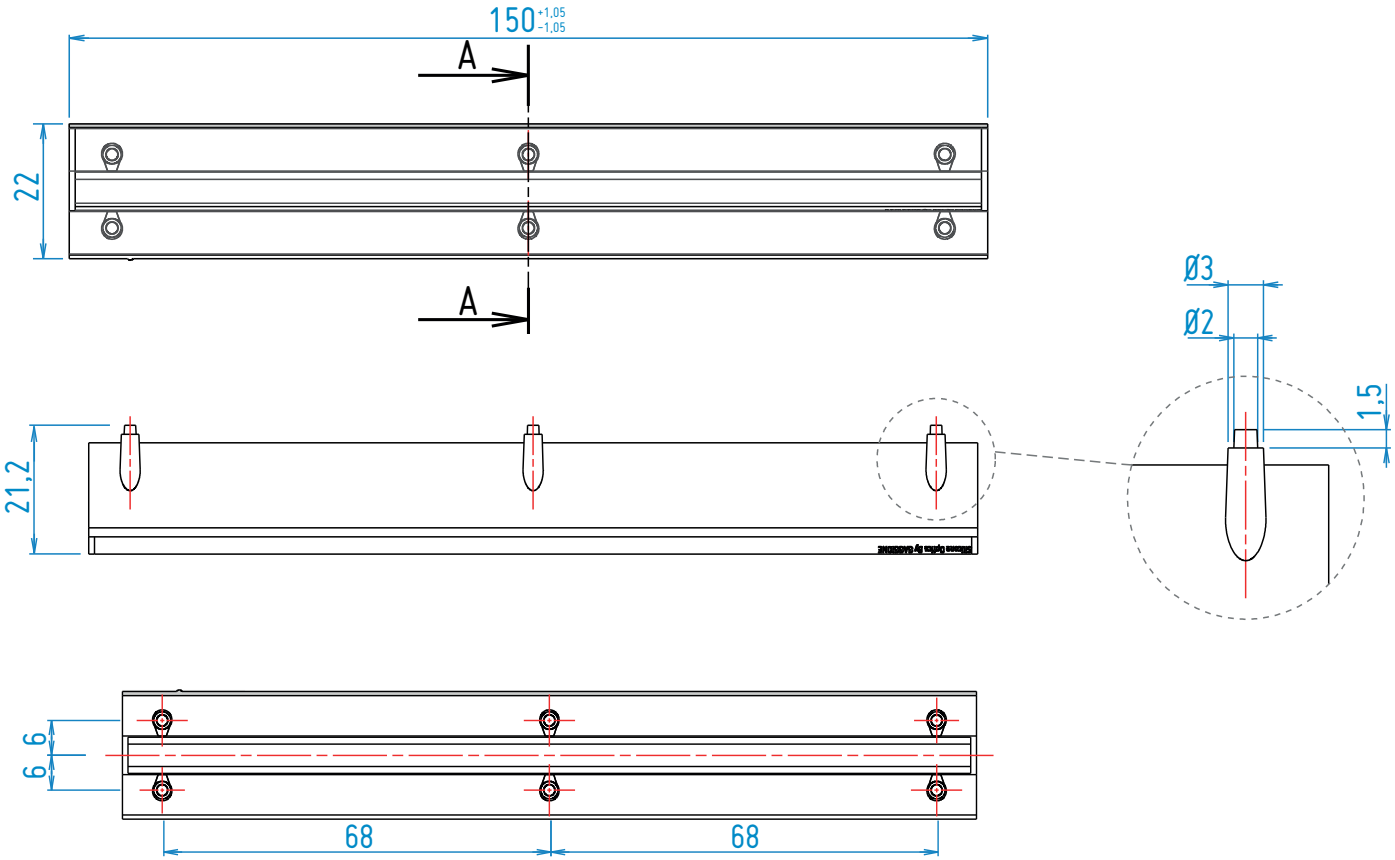

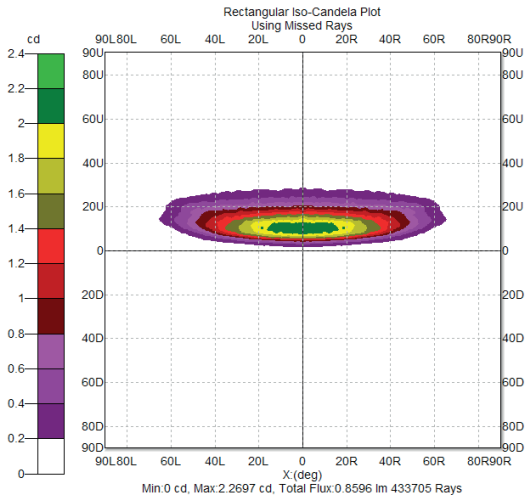

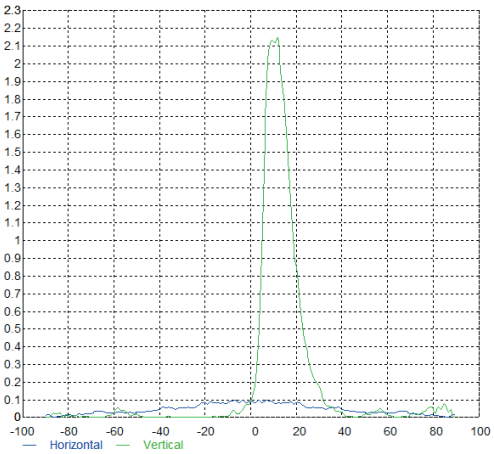

LED choice, size and focus

Linear silicone collimators have been designed to be compatible with both high power or mid power LED. Demonstrators have been manufactured using CREE XPE and OSRAM DURIS S5. The two main points to be taken into consideration are the LED package size and the LED thickness related to focus point.

A particular attention will have to be taken regarding the focus position of the collimator. Depending on the LED package thickness, a PCB routing might be necessary to ensure a proper alignement of the Light Emitting Surface of the LED with the collimator focal position. A thickness of 1.25mm requires no additional routing.
The following schematics describes the recommended PCB configuration for both 0.75mm and 1.25mm LED package thickness :

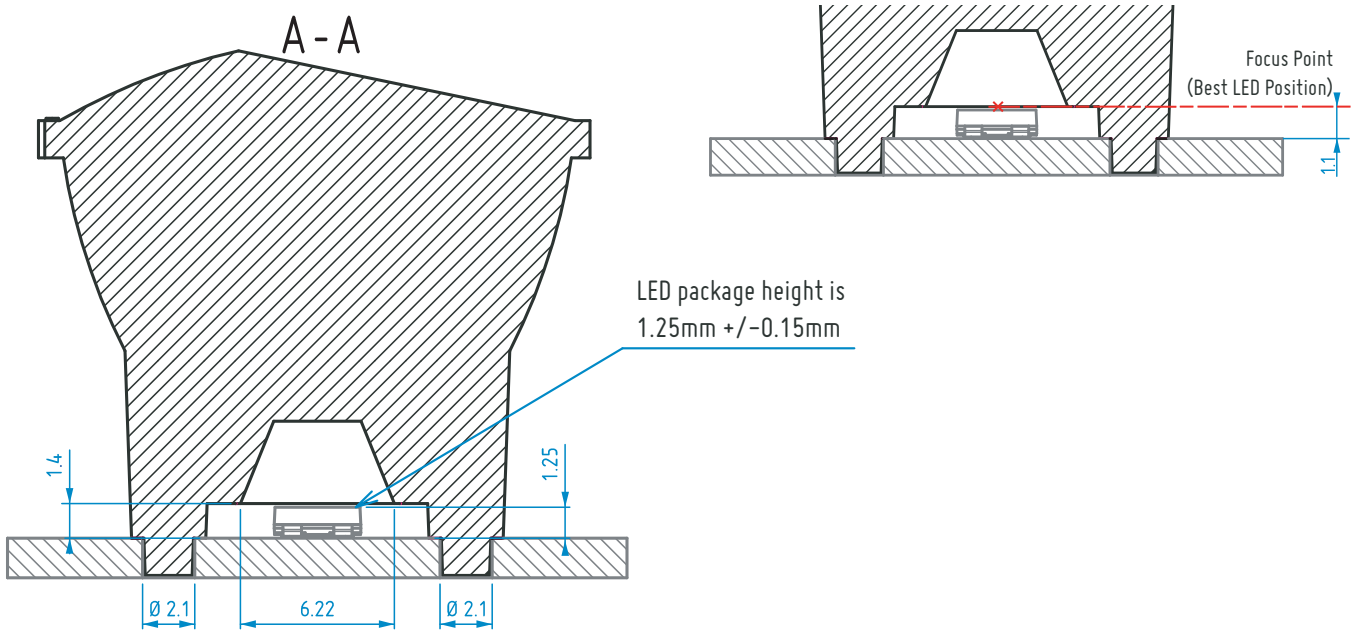

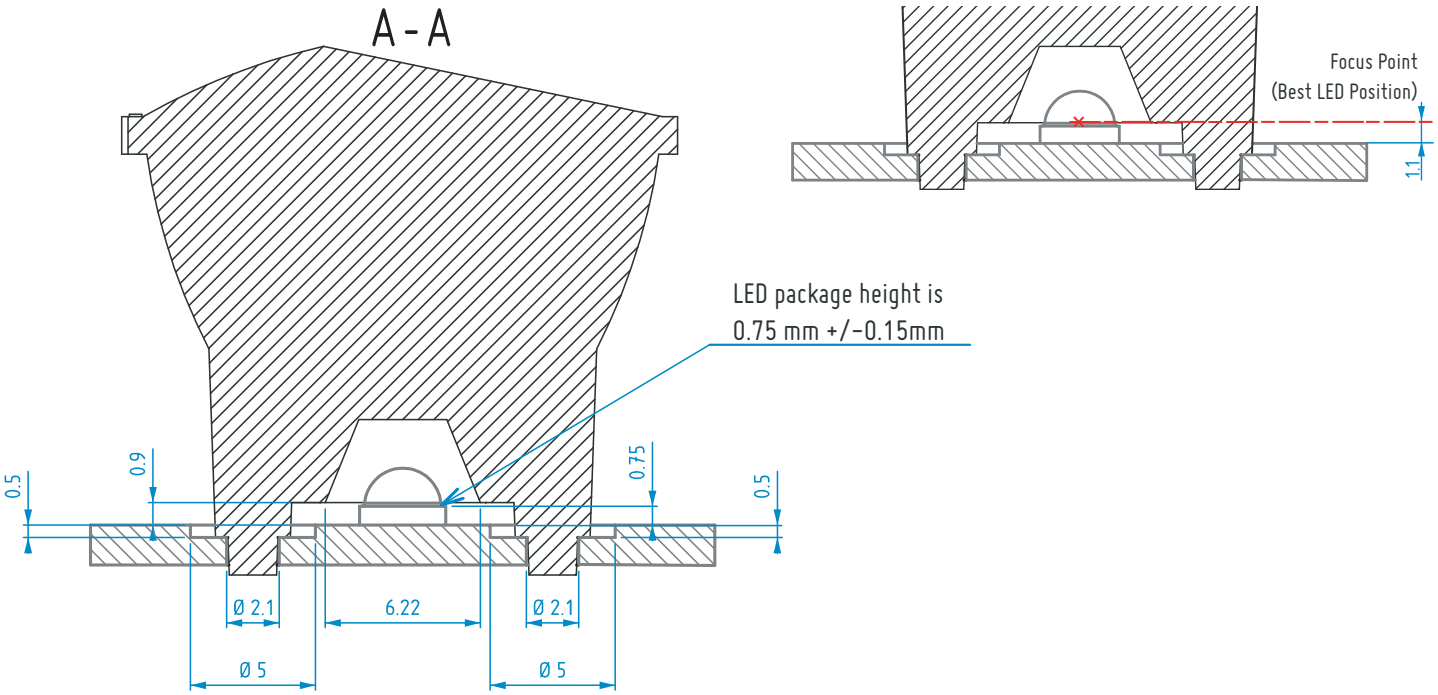

Material and mechanics

These collimators are manufactured with Shore 70 silicone. When coupling multiple collimators together, it is recommended to keep a 1 mm to 2 mm gap between collimators to comply with the thermal expansion of the material : 27.5 x 10^{-5} cm/cm/°C.

We recommend to glue the collimator feet to the PCB after assembly using silicone glue. The compatibility between the selected glue and the LED material has to be confirmed by the LED manufacturer to avoid any unwanted chemical interaction.

We do not recommend to cut the collimator feet to match the exact LED focus point. Even if manufactured in a soft material, it will not be possible to have an accurate machining of the parts to ensure a proper alignement of the part on the PCB.

For information, same PCB design and LED focus point adaptation will apply for both references.

LED spacing

To ensure a proper light uniformity, we recommend a 12 to 32 LED configuration per collimator. The proper pitch will depend on the LED beam angle and power.

We recommend using :

- 12 to 24 LED per collimator for High power LED.
- 18 to 32 LED per collimator for 5630 or 3030 midpower LED.

PCB drawing examples

18x Midpower 5630

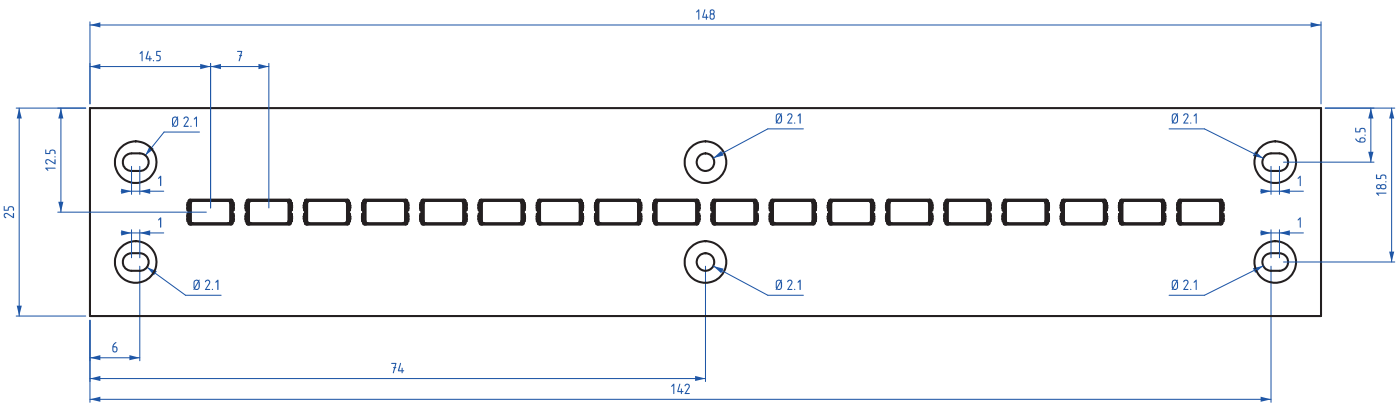

24x Midpower 3030

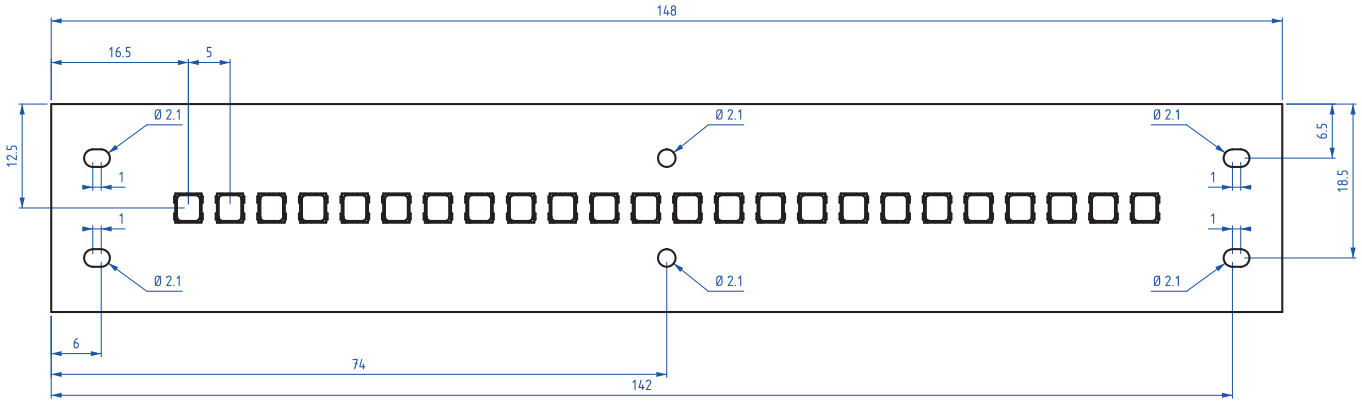

32x Midpower 3030

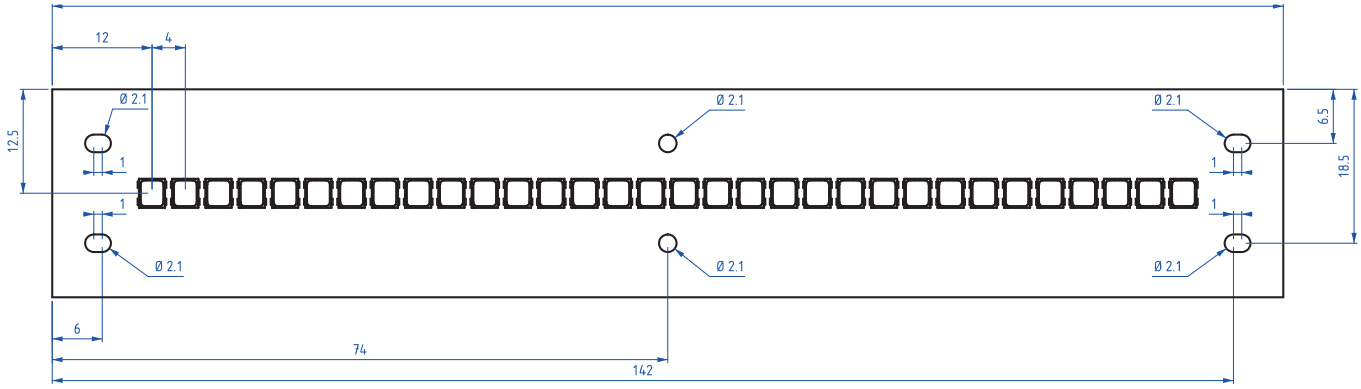

12x High Power

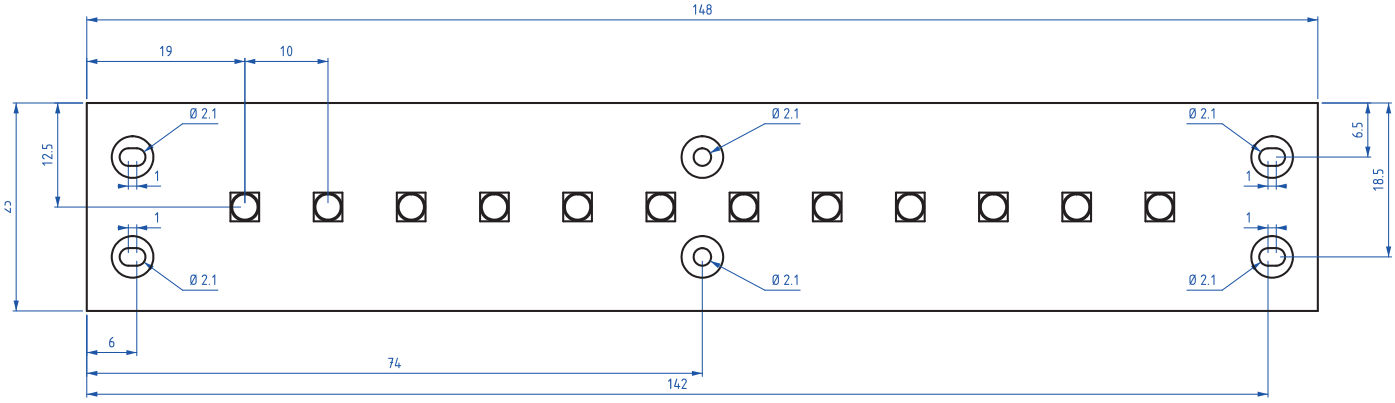

24x High Power

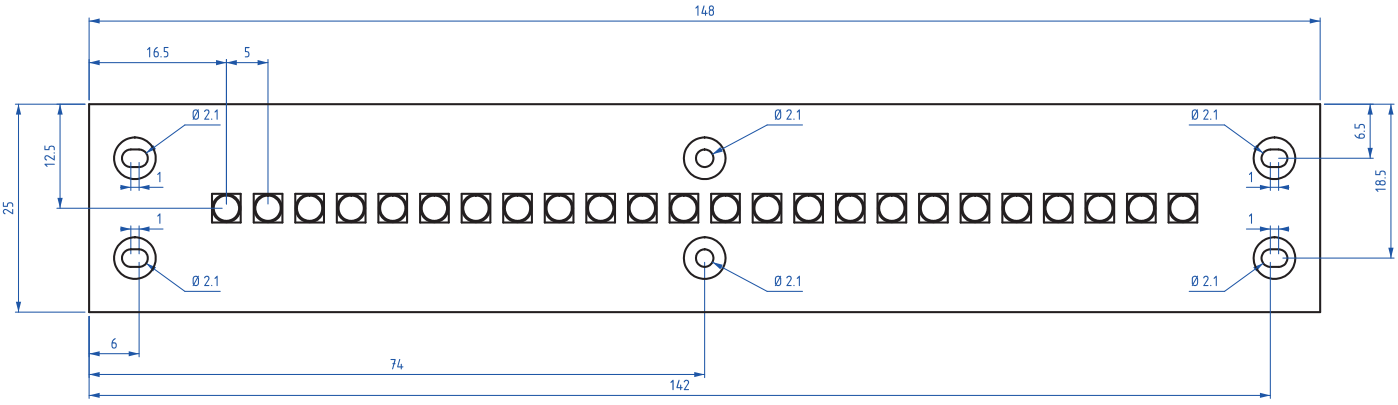

GAGGIONE SAS Headquarter
3, Rue de la Rolland
01460 Montréal la Cluse
France
+33 4 74 76 12 66
contact@gaggione.com
www.optic-gaggione.com

Sales Team in GAGGIONE

Sandrine Mancuso
France, UK, Italy, Spain
s.mancuso@gaggione.com
+33 787 87 84 72

Antoine Le Cordier
France, Scandinavia,
Eastern and Northern Europe
a.lecordier@gaggione.com
+33 607 37 20 28

Laurent Barel
Sales & Marketing Director
l.barel@gaggione.com
+33 612 04 41 30

International Sales Offices

GAGGIONE Americas
Michael Pietro
12833 Surrey Ct.
Palos Park, IL
60464
m.pietro@gaggione.com
+1 224 392 0087

GAGGIONE Asia
Zhen Xu
Unit 1808, No. 8, Kuaiji Road,
Jintiandi International building,
Huangpu District,
Shanghai, 200021, China
z.xu@gaggione.com
+86 136 5189 6981

GAGGIONE Canada
Stephane Saindon
744 36th Avenue
Montreal, Quebec
H8T3L2
s.saindon@gaggione.com
+1 514 928 2179

GAGGIONE DACH
Angelika Aigner
Kreuzstrasse 7
83355 Grabenstätt
Germany
a.aigner@gaggione.com
+49 8661 983 44 77

May 2021